Recommended Exposed Minimum Land Pattern (For: "Non-PEDESTAL" MCPCB Board Design)

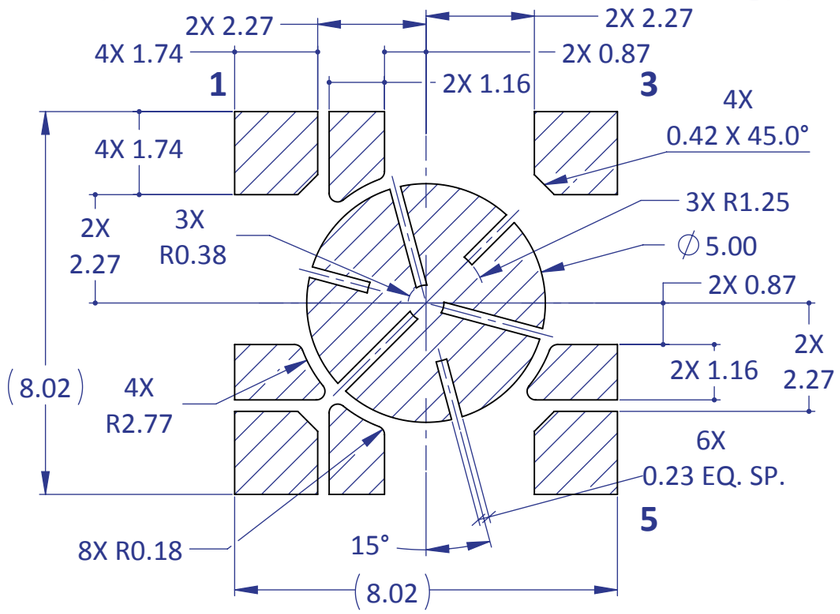

Recommended Apertures for 8mil Stencil (based on Recommended Exposed Minimum Land Pattern)

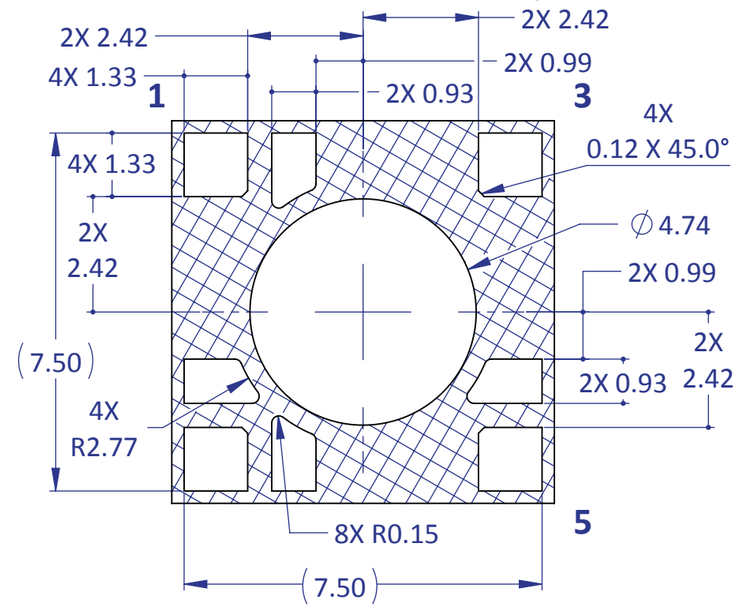

Emitter's Footprint (For Reference Only)

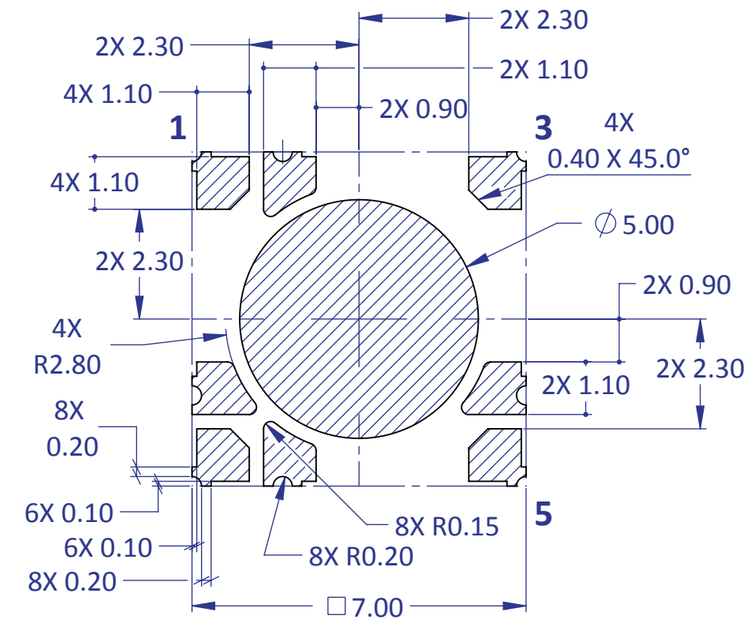

Recommended Solder Mask Openings (based on Recommended Exposed Minimum Land Pattern)

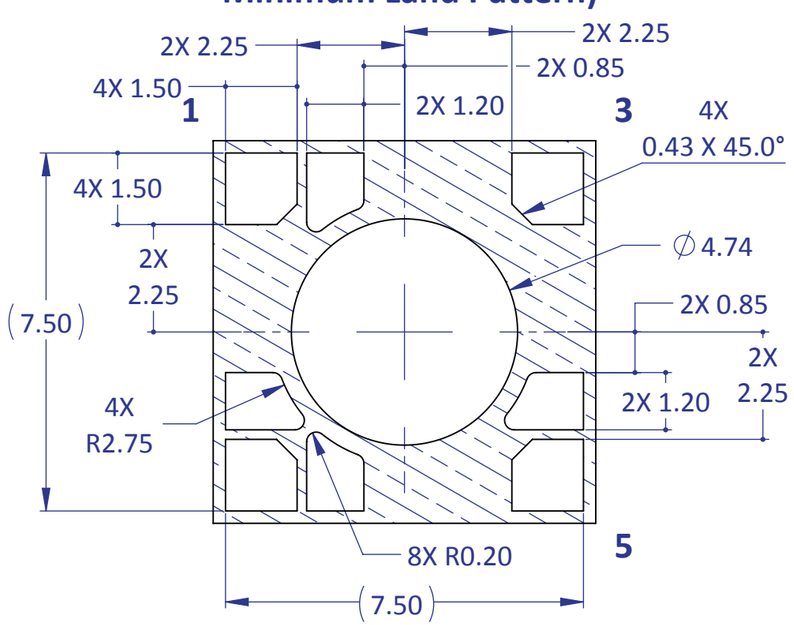

NOTES: TOLERANCE BLOCK DOES NOT APPLY.
ALL DIMENSIONS ARE TYPICAL.

Third Angle Projection		NAME	DATE	**LED Engin, Inc.**
DIMENSIONS ARE IN MILLIMETERS TOLERANCES: .X ± 0.5 .XX ± 0.25 .XXX ± 0.10 Angle ± 1°	DRAWN	DAA	08/04/15	TITLE: **LZ4 Footprint Information** (For: "Non-PEDESTAL" MCPCB)
	CHECKED			
	ENG APPR.			
	MFG APPR.			
	Q.A.			
MATERIAL: N/A	**PROPRIETARY AND CONFIDENTIAL** THE INFORMATION CONTAINED IN THIS DRAWING IS THE SOLE PROPERTY OF LED ENGIN, INC. ANY REPRODUCTION IN PART OR AS A WHOLE WITHOUT THE WRITTEN PERMISSION OF LED ENGIN, INC. IS PROHIBITED.			SIZE **B** / DWG. NO. **LZ4-Footprint(Non-Ped)-P3** / REV B
FINISH: N/A				
FILE NAME: LZ4-Footprint(Non-Ped)-P3_RevB				SCALE: 8:1 / SHEET 1 OF 1